Cambridge Assessment International Education

Cambridge International AS & A Level

PHYSICS **9702/12**

Paper 1 Multiple Choice **February/March 2022**

1 hour 15 minutes

You must answer on the multiple choice answer sheet.

You will need: Multiple choice answer sheet
Soft clean eraser
Soft pencil (type B or HB is recommended)

INSTRUCTIONS

- There are **forty** questions on this paper. Answer **all** questions.
- For each question there are four possible answers **A**, **B**, **C** and **D**. Choose the **one** you consider correct and record your choice in soft pencil on the multiple choice answer sheet.
- Follow the instructions on the multiple choice answer sheet.
- Write in soft pencil.
- Write your name, centre number and candidate number on the multiple choice answer sheet in the spaces provided unless this has been done for you.
- Do **not** use correction fluid.
- Do **not** write on any bar codes.
- You may use a calculator.

INFORMATION

- The total mark for this paper is 40.
- Each correct answer will score one mark.
- Any rough working should be done on this question paper.

IB22 03_9702_12/4RP
© UCLES 2022

[Turn over

Data

acceleration of free fall	$g = 9.81\,\text{m s}^{-2}$
speed of light in free space	$c = 3.00 \times 10^{8}\,\text{m s}^{-1}$
elementary charge	$e = 1.60 \times 10^{-19}\,\text{C}$
unified atomic mass unit	$1\,\text{u} = 1.66 \times 10^{-27}\,\text{kg}$
rest mass of proton	$m_\text{p} = 1.67 \times 10^{-27}\,\text{kg}$
rest mass of electron	$m_\text{e} = 9.11 \times 10^{-31}\,\text{kg}$
Avogadro constant	$N_\text{A} = 6.02 \times 10^{23}\,\text{mol}^{-1}$
molar gas constant	$R = 8.31\,\text{J K}^{-1}\,\text{mol}^{-1}$
Boltzmann constant	$k = 1.38 \times 10^{-23}\,\text{J K}^{-1}$
gravitational constant	$G = 6.67 \times 10^{-11}\,\text{N m}^2\,\text{kg}^{-2}$
permittivity of free space	$\varepsilon_0 = 8.85 \times 10^{-12}\,\text{F m}^{-1}$ $\left(\frac{1}{4\pi\varepsilon_0} = 8.99 \times 10^{9}\,\text{m F}^{-1}\right)$
Planck constant	$h = 6.63 \times 10^{-34}\,\text{J s}$
Stefan–Boltzmann constant	$\sigma = 5.67 \times 10^{-8}\,\text{W m}^{-2}\,\text{K}^{-4}$

Formulae

uniformly accelerated motion	$s = ut + \frac{1}{2}at^2$ $v^2 = u^2 + 2as$
hydrostatic pressure	$\Delta p = \rho g \Delta h$
upthrust	$F = \rho g V$
Doppler effect for sound waves	$f_\text{o} = \frac{f_\text{s} v}{v \pm v_\text{s}}$
electric current	$I = Anvq$
resistors in series	$R = R_1 + R_2 + ...$
resistors in parallel	$\frac{1}{R} = \frac{1}{R_1} + \frac{1}{R_2} + ...$

© UCLES 2022

1 What could **not** be a measurement of a physical quantity?

A 10 K **B** 11 $J N^{-1} m^{-1}$ **C** 17 $Pa m^3 N^{-1}$ **D** 25 T m

2 A computer memory stick is labelled as having a storage capacity of 128 GB.

The letter B stands for byte, which is a unit.

What is the equivalent storage capacity?

A 1.28×10^8 B

B 1.28×10^{11} B

C 1.28×10^{14} B

D 1.28×10^{17} B

3 A man of mass 75.2 kg uses a set of weighing scales to measure his mass three times. He obtains the following readings.

	mass / kg
reading 1	80.2
reading 2	80.1
reading 3	80.2

Which statement describes the precision and accuracy of the weighing scales?

A not precise to $\pm$ 0.1 kg and accurate to $\pm$ 0.1 kg

B not precise to $\pm$ 0.1 kg and not accurate to $\pm$ 0.1 kg

C precise to $\pm$ 0.1 kg and accurate to $\pm$ 0.1 kg

D precise to $\pm$ 0.1 kg and not accurate to $\pm$ 0.1 kg

4 Which statement about scalar and vector quantities is correct?

A A scalar quantity has direction but not magnitude.

B A scalar quantity has magnitude but not direction.

C A vector quantity has direction but not magnitude.

D A vector quantity has magnitude but not direction.

© UCLES 2022

5 How can the acceleration of an object be determined?

A from the area under a displacement–time graph

B from the area under a velocity–time graph

C from the gradient of a displacement–time graph

D from the gradient of a velocity–time graph

6 A sprinter takes a time of 11.0 s to run a 100 m race. She first accelerates uniformly from rest, reaching a speed of 10 m s^{-1}. She then runs at a constant speed of 10 m s^{-1} until the finish line.

What is the uniform acceleration of the sprinter for the first part of the race?

A 0.5 m s^{-2} **B** 0.91 m s^{-2} **C** 1.7 m s^{-2} **D** 5.0 m s^{-2}

7 A single horizontal force *F* is applied to a block X which is in contact with a separate block Y, as shown.

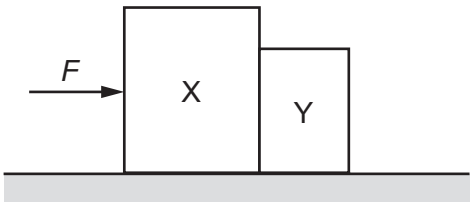

The blocks remain in contact as they accelerate along a horizontal frictionless surface. Air resistance is negligible. X has a greater mass than Y.

Which statement is correct?

A The acceleration of X is equal to force *F* divided by the mass of X.

B The force that X exerts on Y is equal to *F*.

C The force that X exerts on Y is less than *F*.

D The force that X exerts on Y is less than the force that Y exerts on X.

8 A car of mass 750 kg has a horizontal driving force of 2.0 kN acting on it. It has a forward horizontal acceleration of 2.0 m s^{-2}.

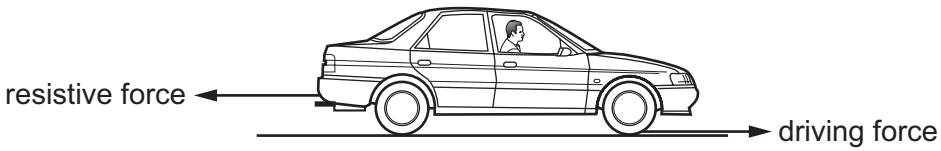

What is the resistive force acting horizontally?

A 0.50 kN **B** 1.5 kN **C** 2.0 kN **D** 3.5 kN

© UCLES 2022

9 An object falls freely from rest in a vacuum. The graph shows the variation with time t of the velocity v of the object.

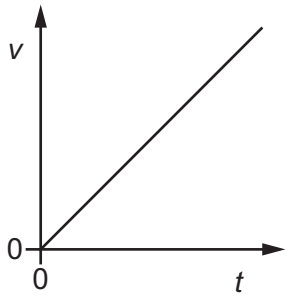

Which graph, **using the same scales**, represents the object falling in air?

A

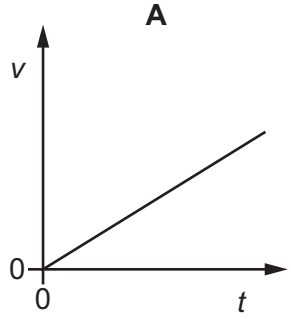

B

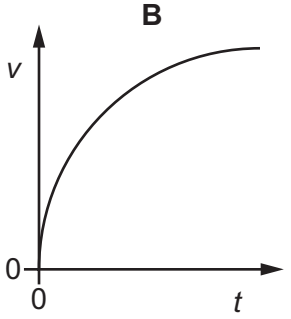

C

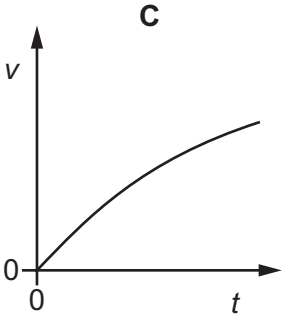

D

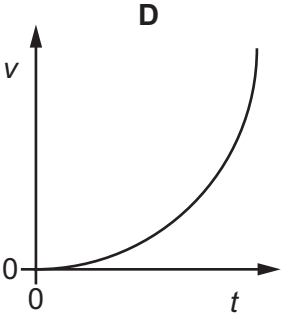

10 A rock of mass $2m$, travelling in deep space at velocity v, explodes into two parts of equal mass, one of which is then stationary.

What is the kinetic energy of the moving part after the explosion?

A $\frac{1}{2}mv^2$ **B** mv^2 **C** $\frac{3}{2}mv^2$ **D** $2mv^2$

11 A horizontal metal bar PQ of length 50.0 cm is hinged at end P. The diagram shows the metal bar viewed from above.

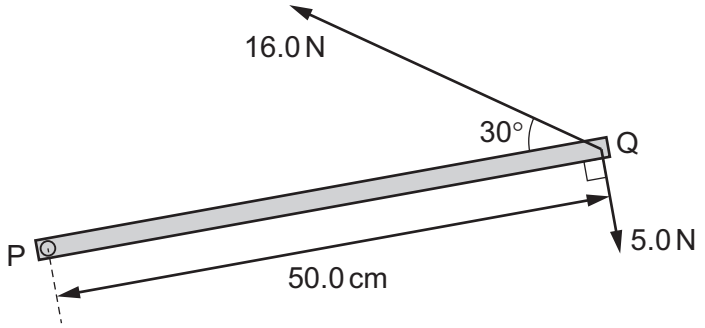

Two forces of 16.0 N and 5.0 N are in the horizontal plane and act on end Q, as shown.

What is the resultant moment about P due to the two forces?

A 1.5 N m **B** 4.4 N m **C** 6.5 N m **D** 9.4 N m

© UCLES 2022

12 A cube WXZY has sides of length 2.0 cm and mass 24.0 g. The cube rests on a metre rule of negligible mass. The geometrical centre of the cube is vertically above the 70.0 cm mark on the scale of the rule.

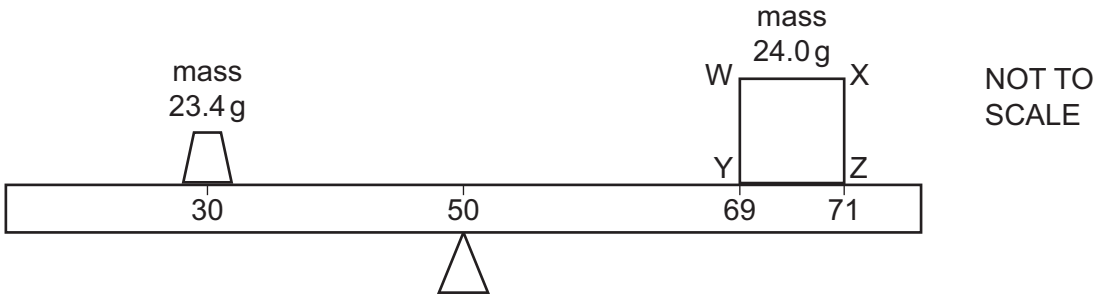

The cube has a non-uniform density so that its centre of gravity is **not** at its geometrical centre. The centre of gravity of the cube is in the plane of the diagram.

The rule rests on a pivot at the 50.0 cm mark. A mass of 23.4 g is placed vertically above the 30.0 cm mark. The rule is horizontal and in equilibrium.

What can be determined about the position of the centre of gravity of the cube?

A It must be somewhere along a horizontal line that is 0.5 cm from line WX.

B It must be somewhere along a horizontal line that is 0.5 cm from line YZ.

C It must be somewhere along a vertical line that is 0.5 cm from line WY.

D It must be somewhere along a vertical line that is 0.5 cm from line XZ.

13 A rigid sphere is held at rest on the sea bed. When the sphere is released, it rises to the surface of the sea. The seawater has a uniform density.

Which statement about the sphere, from its release until it reaches the surface, is correct?

A The sphere always moves with constant acceleration.

B The sphere always moves with constant velocity.

C The upthrust on the sphere always decreases.

D The upthrust on the sphere is always constant.

14 What is a unit for density?

A $\mathrm{N\,m^{-3}}$ **B** $\mathrm{g\,mm^{-1}}$ **C** $\mathrm{kg\,cm^{-2}}$ **D** $\mu\mathrm{g\,mm^{-3}}$

© UCLES 2022

15 The total energy input E_{in} in a process is partly transferred to useful energy output U and partly transferred to energy that is wasted W.

What is the efficiency of the process?

A $\frac{U}{E_{in}} \times 100\%$

B $\frac{W}{E_{in}} \times 100\%$

C $\frac{U}{W} \times 100\%$

D $\frac{U+W}{E_{in}} \times 100\%$

16 An escalator is 60 m long and lifts passengers through a vertical height of 30 m, as shown.

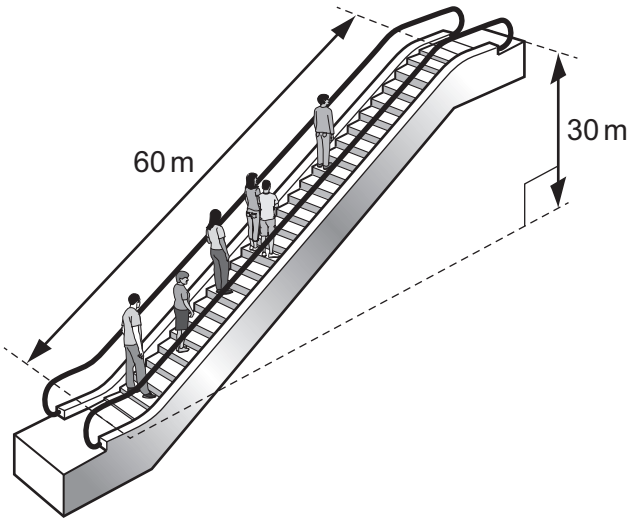

To drive the escalator against the forces of friction when there are no passengers requires a power of 2.0 kW.

The escalator is used by passengers of average mass 60 kg and the power to overcome friction remains constant.

How much power is required to drive the escalator when it is carrying 20 passengers and is travelling at 0.75 m s^{-1}?

A 4.4 kW **B** 6.4 kW **C** 8.8 kW **D** 10.8 kW

17 A rock of mass 40 kg is released from rest from a height of 20 m above the surface of a planet.

The rock has a kinetic energy of 32 kJ when it hits the surface of the planet. The planet does not have an atmosphere.

What is the weight of the rock on the surface of the planet?

A 1.6 N **B** 390 N **C** 1.6 kN **D** 64 kN

© UCLES 2022

18 A metal wire is stretched. The wire obeys Hooke's law.

Which quantity has a value that does **not** change?

A extension

B strain

C stress

D Young modulus

19 An object is stretched until it reaches the elastic limit.

Which statement must describe the stress on the object when it is at the elastic limit?

A It is the maximum stress for which the object obeys Hooke's law.

B It is the maximum stress that can be applied to the object before it has elastic deformation.

C It is the maximum stress that can be applied to the object before it has plastic deformation.

D It is the maximum stress the object can withstand before it breaks.

20 Which statement about progressive waves is correct?

A They are always transverse waves.

B They can exist in solids but not liquids.

C They decrease in frequency as their speed increases.

D They transfer energy away from their source.

21 A cathode-ray oscilloscope (CRO) is used to determine the frequency of a sound wave.

The diagram shows the waveform on the screen.

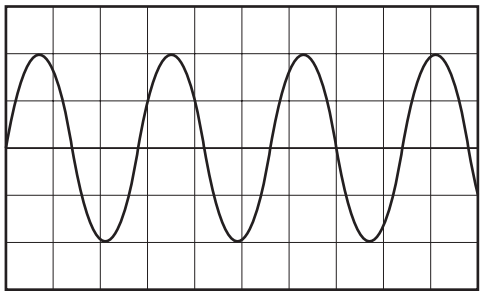

The time-base setting is $5.0\,\text{ms}\,\text{div}^{-1}$.

What is the best estimate of the frequency of the sound wave?

A 50 Hz **B** 71 Hz **C** 100 Hz **D** 143 Hz

© UCLES 2022

22 The warning signal on an ambulance has a frequency of 600 Hz. The speed of sound is 330 $m\,s^{-1}$. The ambulance is travelling with a constant velocity of 25 $m\,s^{-1}$ towards an observer. The ambulance passes, and then moves away from the observer with no change in velocity.



Which overall change in observed frequency takes place between the times at which the ambulance is a long way behind the observer and when it is a long way in front of the observer?

A 49 Hz **B** 84 Hz **C** 91 Hz **D** 98 Hz

23 Brief pulses of red, blue and green light are emitted from the Sun at the same time.

The pulses travel the same distance to reach Mars. Assume that the pulses travel in a vacuum for the full duration of their journey.

In which order would these pulses of light arrive at Mars?

A all arrive at the same time

B blue first, then green, then red

C red first, then blue, then green

D red first, then green, then blue

24 Two coherent progressive waves from different sources meet at a point.

Which condition **must** be satisfied for there to be zero resultant amplitude at the point where the waves meet?

A The two waves must be emitted from their sources with the same intensity.

B The two waves must be in phase with each other at the point.

C The two waves must be travelling in opposite directions.

D The two waves must have the same amplitude at the point.

© UCLES 2022

25 A corridor is 13.2 m long and has closed doors that reflect sound at both ends. The speed of sound in the air in the corridor is 330 m s^{-1}.

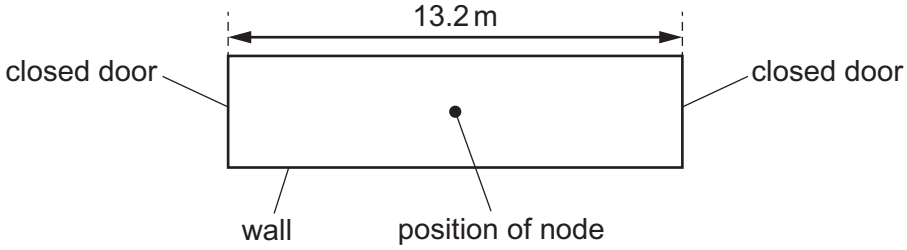

What is the lowest frequency of sound that could create a stationary wave in the corridor with a node halfway along it?

A 0.040 Hz **B** 13 Hz **C** 25 Hz **D** 50 Hz

26 Water waves of wavelength λ are formed in a ripple tank. The waves are diffracted as they pass through a narrow gap of width d (d is greater than λ).

Which gap width and which wavelength will cause the largest decrease in the amount of diffraction?

	gap width	wavelength
A	$\frac{1}{2}d$	$\frac{1}{2}\lambda$
B	$\frac{1}{2}d$	2λ
C	$2d$	$\frac{1}{2}\lambda$
D	$2d$	2λ

27 Two loudspeakers X and Y emit sound waves that are in phase and of wavelength 0.75 m.

An observer O is able to stand anywhere on a straight line that passes through X and Y, as shown. The observer stands at a point where the sound waves from X and Y meet in phase.

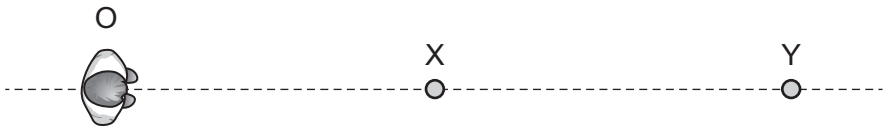

What could be the distances OY and XY?

	distance OY / m	distance XY / m
A	1.25	3.50
B	2.00	2.75
C	2.75	2.00
D	3.25	1.50

© UCLES 2022

28 Light of a single wavelength is incident normally on a diffraction grating.

The resulting diffraction pattern is displayed on a screen.

Which change makes the first orders of intensity maxima further apart from each other on the screen?

A placing the screen closer to the diffraction grating

B using a diffraction grating with less separation between adjacent slits

C using a diffraction grating with more slits but keeping the same separation between adjacent slits

D using light with a shorter wavelength

29 For a current-carrying wire, the current can be calculated using the equation shown.

$$I = Anvq$$

What is the meaning of n?

A the number of charge carriers in the wire

B the number of charge carriers multiplied by the volume of the wire

C the number of charge carriers per unit length of the wire

D the number of charge carriers per unit volume of the wire

30 The number of free electrons passing a point in a wire in 24 hours is 6.0×10^{23}.

What is the average current in the wire?

A 6.3 pA **B** 1.1 A **C** 67 A **D** 4.0 kA

31 In the circuit shown, lamp P is rated 250 V, 50 W and lamp Q is rated 250 V, 200 W. The two lamps are connected in series to a 250 V power supply.

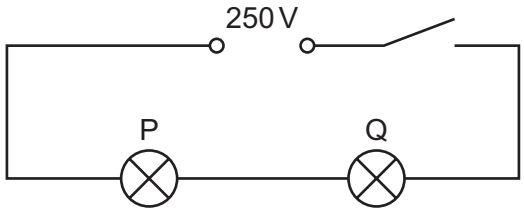

Assume that the resistance of each lamp remains constant.

Which statement most accurately describes what happens when the switch is closed?

A Lamp P emits four times as much power as lamp Q.

B Lamp P emits twice as much power as lamp Q.

C Lamp Q emits four times as much power as lamp P.

D Lamp Q emits twice as much power as lamp P.

32 A piece of wire has a length of 0.80 m and a diameter of 5.0×10^{-4} m. The I–V characteristic of the wire is shown.

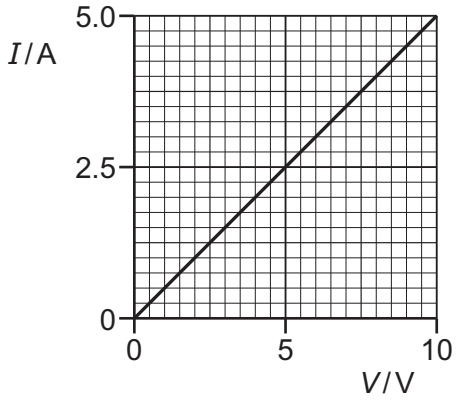

What is the resistivity of the metal from which the wire is made?

A $1.2 \times 10^{-7}\,\Omega\,\text{m}$

B $1.6 \times 10^{-7}\,\Omega\,\text{m}$

C $4.9 \times 10^{-7}\,\Omega\,\text{m}$

D $2.0 \times 10^{-6}\,\Omega\,\text{m}$

© UCLES 2022

33 Ten cells, each of electromotive force (e.m.f.) 1.5 V, are connected together, as shown.

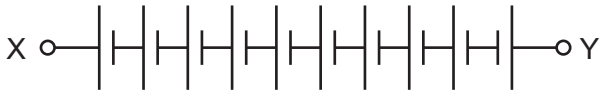

What is the combined e.m.f. between terminals X and Y?

A 8 V **B** 9 V **C** 12 V **D** 15 V

34 A cell of electromotive force (e.m.f.) *E* and internal resistance *r* is connected to a variable resistor, as shown.

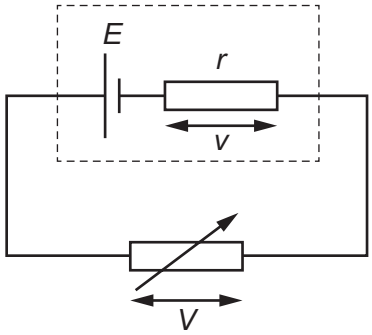

The resistance of the variable resistor is gradually increased from *r* to 3*r*.

Which graph shows the variation of the potential difference (p.d.) *v* across the internal resistance with the p.d. *V* across the variable resistor?

A

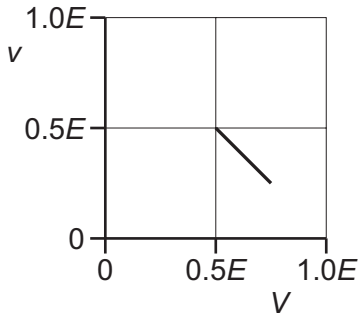

B

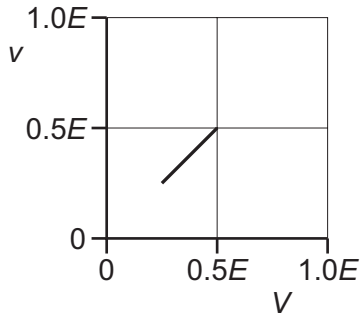

C

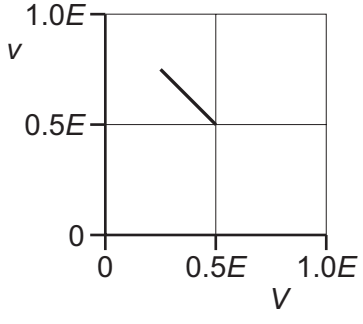

D

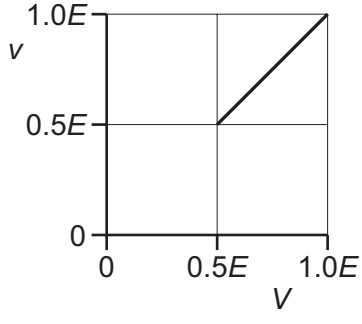

35 Each of Kirchhoff's two laws presumes that some quantity is conserved.

Which row states Kirchhoff's **first** law and names the quantity that is conserved?

	statement	quantity
A	the algebraic sum of currents into a junction is zero	charge
B	the algebraic sum of currents into a junction is zero	energy
C	the e.m.f. in a loop is equal to the algebraic sum of the product of current and resistance round the loop	charge
D	the e.m.f. in a loop is equal to the algebraic sum of the product of current and resistance round the loop	energy

36 A cell has an electromotive force (e.m.f.) of 8.0 V and negligible internal resistance. The cell forms part of a circuit, as shown.

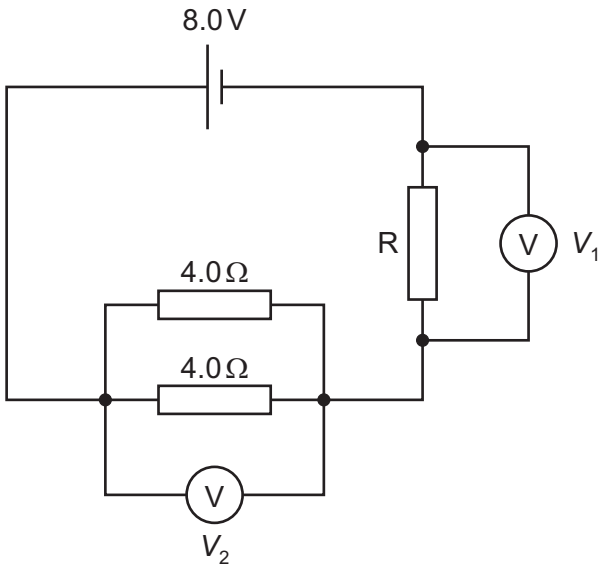

The reading V_1 is 4.0 V and the reading V_2 is also 4.0 V.

What is the resistance of resistor R?

A 0.50 Ω **B** 2.0 Ω **C** 4.0 Ω **D** 8.0 Ω

© UCLES 2022

37 In the circuit shown, the cells have negligible internal resistance and the reading on the galvanometer is zero.

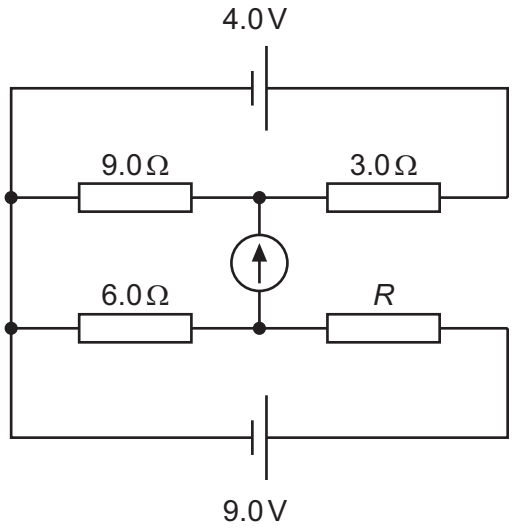

What is the value of resistor *R*?

A 2.0 Ω **B** 6.0 Ω **C** 12 Ω **D** 18 Ω

38 When α-particles are directed at gold leaf:

1 almost all α-particles pass through without deflection

2 a few α-particles are deviated through large angles.

What are the reasons for these effects?

	1	2
A	most α-particles have enough energy to pass right through the gold leaf	gold is very dense so a few low energy α-particles bounce back from the gold surface
B	most α-particles miss all gold atoms	a few α-particles bounce off gold atoms
C	the gold nucleus is very small so most α-particles miss all nuclei	occasionally the path of an α-particle is close to a nucleus
D	the positive charge in an atom is not concentrated enough to deflect an α-particle	occasionally an α-particle experiences many small deflections in the same direction

© UCLES 2022

39 A nucleus X is radioactive and decays into a nucleus Y.

X and Y are isotopes of the same element.

Which combination of particles could have been emitted during the decay process?

A 1 α-particle and 1 β^- particle

B 1 α-particle and 2 β^- particles

C 2 α-particles and 1 β^- particle

D 2 α-particles and 2 β^- particles

40 A positively charged meson consists of a quark and an antiquark.

What could be the quark and antiquark?

A charm and antiup

B down and antitop

C strange and antibottom

D up and antistrange

Permission to reproduce items where third-party owned material protected by copyright is included has been sought and cleared where possible. Every reasonable effort has been made by the publisher (UCLES) to trace copyright holders, but if any items requiring clearance have unwittingly been included, the publisher will be pleased to make amends at the earliest possible opportunity.

To avoid the issue of disclosure of answer-related information to candidates, all copyright acknowledgements are reproduced online in the Cambridge Assessment International Education Copyright Acknowledgements Booklet. This is produced for each series of examinations and is freely available to download at www.cambridgeinternational.org after the live examination series.

Cambridge Assessment International Education is part of Cambridge Assessment. Cambridge Assessment is the brand name of the University of Cambridge Local Examinations Syndicate (UCLES), which is a department of the University of Cambridge.